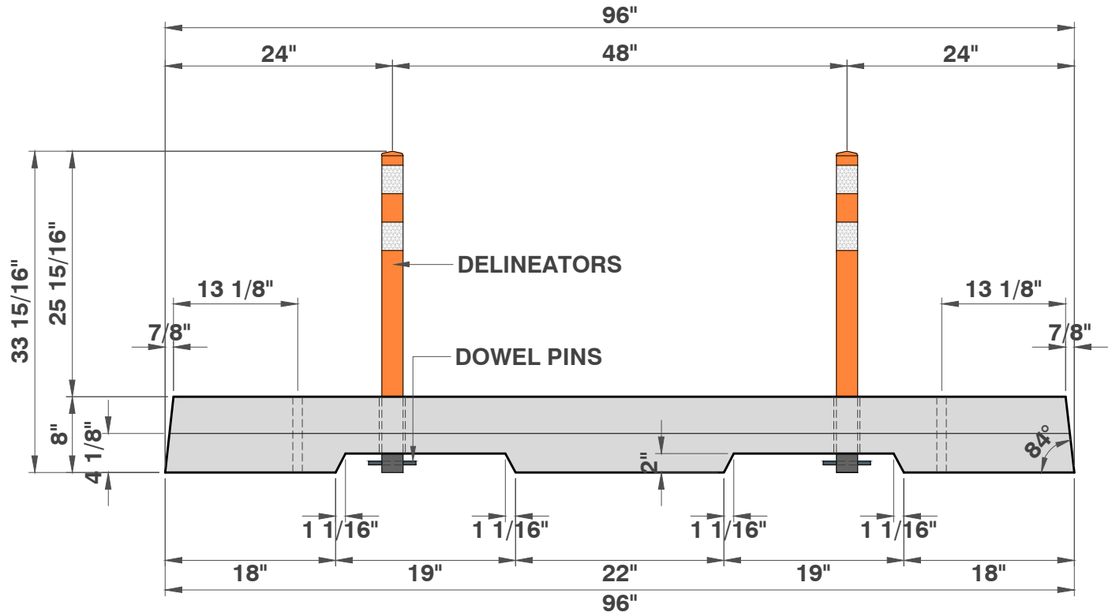

ELEVATION
3/4 "=1'

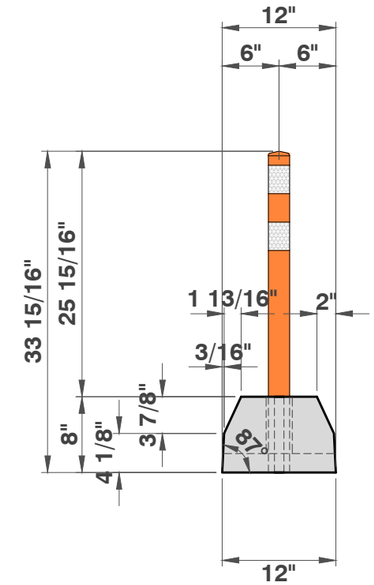

END VIEW
3/4 "=1'

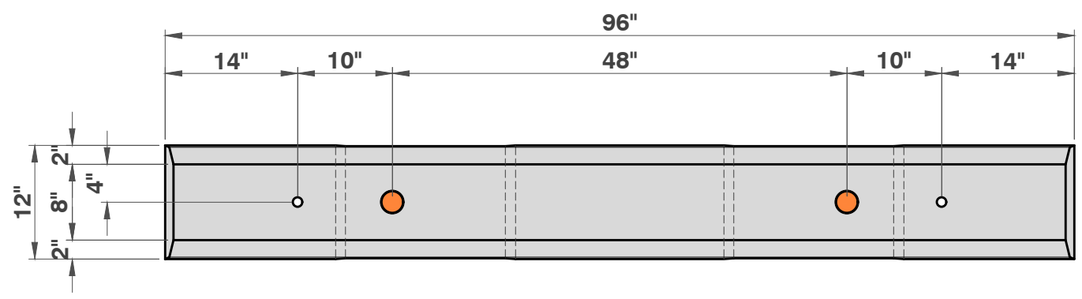

TOP VIEW
3/4 "=1'

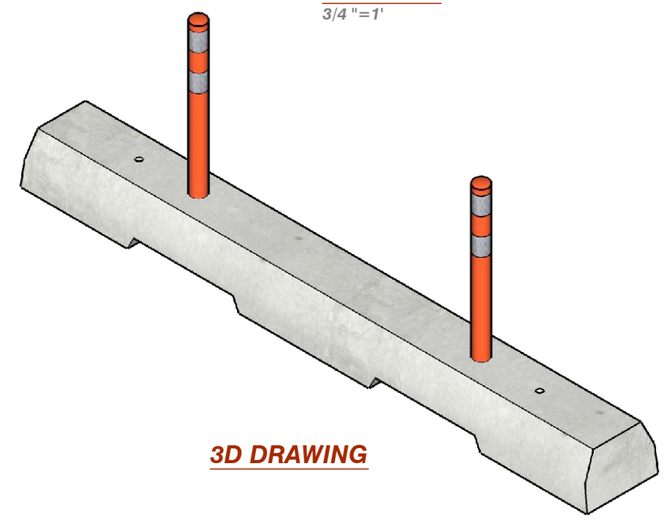

3D DRAWING

PIECE DESCRIPTION:

- TWO 2 3/4"Ø HOLE FOR DELINEATORS
- 2 PCS 2 1/4"Ø x 36" DELINEATORS
- TWO 1"Ø DOWEL HOLES
- 2 PCS 3/8"Ø x 5" DOWEL PINS

NOTE:

- WHEN INSTALLING CURBS WITH PINS. LAYOUT CURBS TO DESIRED POSITION AND THEN INSTALL PIN
- PIN HOLES IN CURBS MAY BE SLIGHTLY ANGLED AND DIFFER FROM CURB TO CURB. DO NOT PRE-DRILL PIN HOLES

CUSTOMER DETAIL INFORMATION	
QUANTITY	
FINISH	
COLOUR (AVAILABLE)	ORANGE, YELLOW, WHITE
WEIGHT	
DIMENSIONS	96" x 33 15/16" x 12"

SANDERSON CONCRETE INC.
www.sandersonconcrete.ca

PROJECT DESCRIPTION:

BIKE LANE BARRIER CAST IN POSTS

DRAWN BY:	REQD BY:
YJE	CA
APPROVED BY:	

RN.	DESCRIPTION	MM/DD/YY

SCALE: AS SHOWN
DATE: 07/15/21
DWG NO: 01

12665 116 Ave Surrey, BC V3V 3S6 Ph. 604-580-4108 toll free 800-671-8882 FAX. 604-580-411 info@sandersonconcrete.com

D:\SANDERSON CONCRETE INC\00130 - 051321 - Parking Curb with Delineators -CA\01. ACAD\01. SET\Bike Line Barriers Cast in Posts 07212021.dwg